For Water

An industrial-grade valve for water systems, the GD-24 is lightweight, compact and economical. Comes with screwed connections and will mount in any position. Requires no external sensing lines. Bronze body and high-temperature diaphragm suitable for hot or cold water service. Valve, seat and diaphragm are renewable in-line. External adjusting screw with lock. Six sizes, 1/2" through 2".

For a fully detailed certified drawing, refer to CDY #1023.

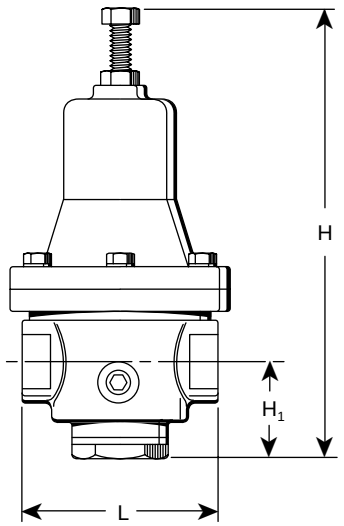



GD-24 Specifications

Application	Maximum Pressure psig (bar)	Reduced Pressure Range psig (bar)	Minimum Differential psig (bar)	Maximum Temperature °F (°C)	Materials			
					Body	Main Valve	Valve Seat	Diaphragm
Hot or Cold Water	20 - 230 (1.3 - 16)	7 - 80 (.48 - 5.5)	7 (.48)	175* (79)	Cast Bronze ASTM 584		Stainless Steel AISI 304	NBR**

*With Viton® diaphragm maximum temperature is 210°F (99°C).
**Viton optional.

GD-24 Capacities—Water

gpm							l/min						
ΔP	Connection Size in						ΔP	Connection Size mm					
psig	1/2	3/4	1	1-1/4	1-1/2	2	bar	15	20	25	32	40	50
7	3	4	7	9	16	22	.5	11.4	15.1	26.5	34.1	60.6	83.3
10	5	6	10	13	22	32	.7	18.9	22.7	37.9	49.2	83.3	121.1
15	6	7	12	16	27	39	1.0	22.7	26.5	45.4	60.6	102.2	147.6
25	8	10	15	20	35	50	1.7	30.3	37.9	56.8	75.7	132.5	189.3
50	11	14	21	28	50	71	3.4	41.6	53.0	79.5	106.0	189.3	268.7
75	13	17	26	35	61	87	5.2	49.2	64.3	98.4	132.5	230.9	329.3
100	15	19	30	40	70	100	6.9	56.8	71.9	113.6	151.4	265.0	378.5
125	17	21	34	45	78	112	8.6	64.3	79.5	128.7	170.3	295.2	423.9
150	18	23	37	49	86	123	10.3	68.1	87.1	140.0	185.5	325.5	465.6
175	20	25	40	53	93	132	12.0	75.7	94.6	151.4	200.6	352.0	500.0
200	21	27	42	57	99	141	13.8	79.5	102.2	159.0	215.7	375.0	533.7

NOTE: Maximum pressure reduction ratio 10:1.

GD-24 Dimensions and Weights

Symbol	Connection Size											
	in	mm	in	mm	in	mm	in	mm	in	mm	in	mm
	1/2	15	3/4	20	1	25	1-1/4	32	1-1/2	40	2	50
L	3-1/4	83	3-1/2	89	4	102	4-3/4	121	6	152	7-1/4	184
H_1	1-3/4	45	2	51	2-1/2	64	3-1/4	83	3-1/2	89	4-1/2	115
H	7-3/4	197	8-1/2	216	9-5/8	245	11-1/4	286	13-1/2	343	16	407
Wt lb (kg)	4 (1.8)		5-1/4 (2.4)		7-1/4 (3.3)		10-3/8 (4.7)		18 (8.2)		31-1/2 (14.3)	
C_v	1.5		2		3		4		7		10	

All dimensions and weights are approximate. Use certified print for exact dimensions. Design and materials are subject to change without notice.

Armstrong Pressure/Temperature Controls Group, 221 Armstrong Blvd., P.O. Box 408, Three Rivers, MI 49093 – USA Phone: (269) 279-3600 Fax: (269) 273-8656
www.armstrong-intl.com